GIA
GEMOLOGICAL INSTITUTE OF AMERICA®

5355 Armada Drive | Carlsbad, CA 92008-4602
T: 760-603-4500 | F: 760-603-1814

GIA Laboratories
Bangkok Carlsbad Gaborone
Johannesburg Mumbai New York

www.gia.edu

COLORED DIAMOND IDENTIFICATION AND ORIGIN REPORT

GIA REPORT 5171168691

December 19, 2011

Shape and Cutting Style ..... **Round-Cornered Rectangular Modified Brilliant**
Measurements ..... **?.01 x 3.75 x 2.31 mm**

Weight ..... **0.32 carat**

Color Grade

Origin ..... **NATURAL**
Grade ..... **FANCY**
..... **PURPLE-PINK**
Distribution ..... **EVEN**

Comments:
None

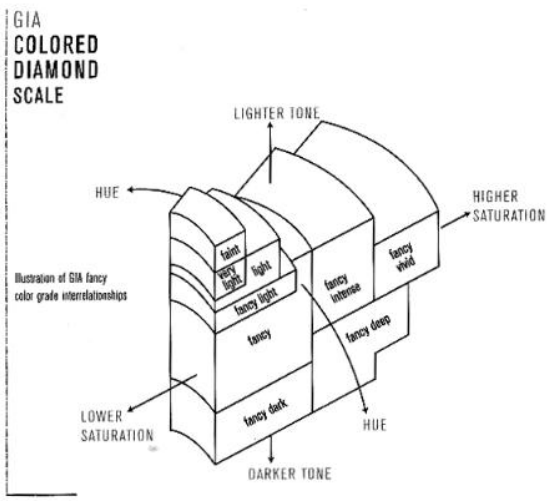

110214591533

This Report is not a guarantee, valuation or appraisal and contains only the characteristics of the diamond described herein after it has been graded, tested, examined and analyzed by the laboratory providing this Report ("GIA") and/or has been inscribed using the techniques and equipment used by GIA at the time of the examination and/or inscription. Inscriptions reported in this document are not a guarantee, validation, or warranty of a diamond's quality, country of origin or source; or that the diamond will be identifiable by the inscription in the future (since inscriptions can be removed). GIA makes no representation concerning any trademark, word, or symbol which is inscribed by GIA or which is identified on this Report. The recipient of this Report may wish to consult a credentialed jeweler or gemologist about the information contained herein.

The security features in this document, including the hologram, security screen and microprint lines, in addition to those not listed, exceed document security industry guidelines.

IMPORTANT LIMITATIONS ON BACK

©2008 GEMOLOGICAL INSTITUTE OF AMERICA, INC.